PC67

SELFLOADING RECTILINEAR DISPLACEMENT TRANSDUCER WITH IP67 PROTECTION DEGREE

Applicative characteristics

- *The PC67 displacement transducer was developed to guarantee a high protection level (IP67) in applications under harsh conditions and outdoors, where it may be necessary to work in the presence of dust, dirt, or liquids (not in prolonged immersion).*
- *The robust structure of the PC series has been improved thanks to a sealing system (patent pending) that makes it extremely reliable.*
- *Ideal for mobile hydraulic applications, on agricultural machines, earth-moving equipment and utility vehicles.*

TECHNICAL DATA

Useful electrical stroke (C.E.U.)	50/100/130/150/175/200/225/275/300/360/375/400/450/500/600/750
Independent linearity (within C.E.U.)	± 0,05% ± 0,075% for stroke ≤ 150mm
Resolution	Infinite
Repeatibility	0,01 mm
Electrical connection	4 pole M12 connector
Protection	IP67 (use M12 4-pin female connector with IP67 protection level or higher)
Life (NOT for prolonged immersion)	> $25x10^6$ m strokes, or > $100x10^6$ maneuvers, whickever is less (within C.E.U.)
Displacement speed	Standard ≤ 3 m/s max ≤ 5 m/s
Displacement force	≤ 30 N
Vibrations	5...2000Hz, Amax =0,75 mm amax. = 20 g
Shock	50 g, 11ms.
Tolerance on resistance	± 20%
Recommended cursor current	< 0,1 µA
Maximum cursor current	10mA
Maximum applicable voltage	60V
Electrical isolation	>100MΩ at 500V=, 1bar, 2s
Dielectric strength	< 100µA at 500V~, 50Hz, 2s, 1bar
Dissipation at 40°C (0W at 120°C)	3W
Temperature Coefficient of the resistance	-200...+200 ppm/°C typic
Actual Temperature Coefficient of the output voltage	≤ 5 ppm/°C typic
Working temperature	-30...+100°C
Storage temperature	-50...+120°C
Case material	Anodised aluminium
Control rod material	C45 steel, chromium plated 20µm
Mounting method	2 selfloading and selfaligning ball-joints

MECHANICAL DIMENSIONS

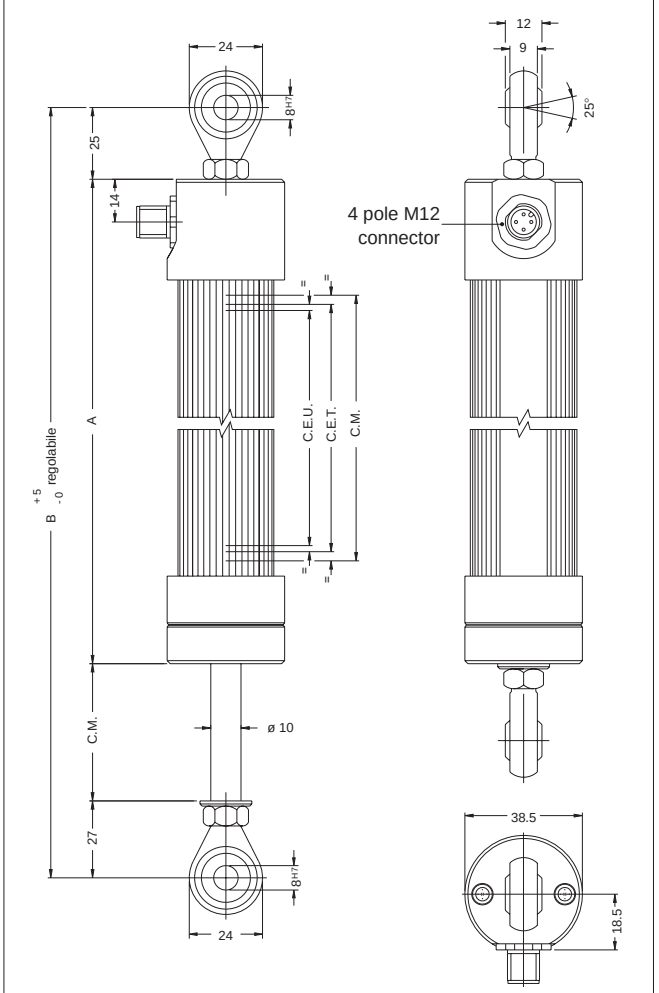

Important: all the data reported in the catalogue (linearity, lifetime, temperature coefficient) are valid for a sensor utilization as a ratiometric device with a max current across the cursor Ic ≤ 0.1 µA.

MECHANICAL / ELECTRICAL DATA

MODEL		50	100	130	150	175	200	225	275	300	360	375	400	450	500	600	750
Useful electrical stroke (C.E.U.) +3/-0	mm	50	100	130	150	175	200	225	275	300	360	375	400	450	500	600	750
Theoretical electrical stroke (C.E.T.) ±1	mm	C.E.U. + 3					C.E.U. + 4				365	380	406	457	508	609	762
Resistance (C.E.T.)	kΩ	5															10
Mechanical stroke (C.M.)	mm	C.E.U. + 9					C.E.U. + 10					386	412	463	518	619	772
Case length (A)	mm	C.E.U. + 143					C.E.U. + 144				510	526	552	603	678	779	932
Min. distance between ball-joints	mm	C.E.U. + 195					C.E.U. + 196				562	578	604	655	730	831	984

Note: It is recommended to keep the sliding parts lubrificated, at least every 6 months.

ELECTRICAL CONNECTIONS

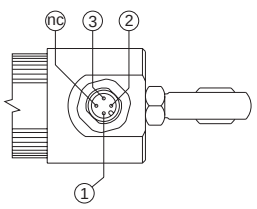

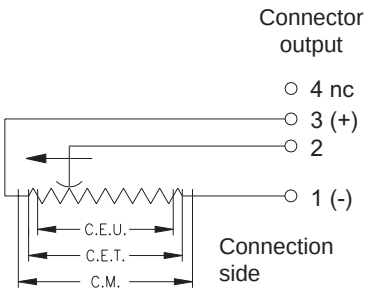

INSTALLATION INSTRUCTIONS

- Respect the indicated electrical connections (DO NOT use the transducer as a variable resistance)
- When calibrating the transducer, be careful to set the stroke so that the output does not drop below 1% or rise beyond 99% of the supply voltage.

ORDER CODE

Displacement transducer **P C 6 7** □□□□ □**0 0 0 X 0 0 0 X 0 0**

Model	
No certificate enclosed	**0**
Linearity curve to be enclosed	**L**

Example.:**PC67-0300 0000X000X00**
Displacement transducer model PC67, 4 pole M12 connector output, useful electrical stroke (C.E.U.) 300mm.

ACCESSORIES **(to order separately)**

4 pole M12 female connector axial, IP67-IEC48B, wire clamp for ø6-ø8mm wire	**CON293**
4 pole M12 female connector radial 90°, IP67	**CON050**

GEFRAN spa reserves the right to make any kind of design or functional modification at any moment without prior notice

GEFRAN spa
via Sebina, 74
25050 PROVAGLIO D'ISEO (BS) - ITALIA
tel. +39 030 9888.1 - fax. +39 030 9839063
http://www.gefran.com

GEFRAN